BENITO –Play

Barrera

JCAN07

T +34 938 521 000
www.benito.com

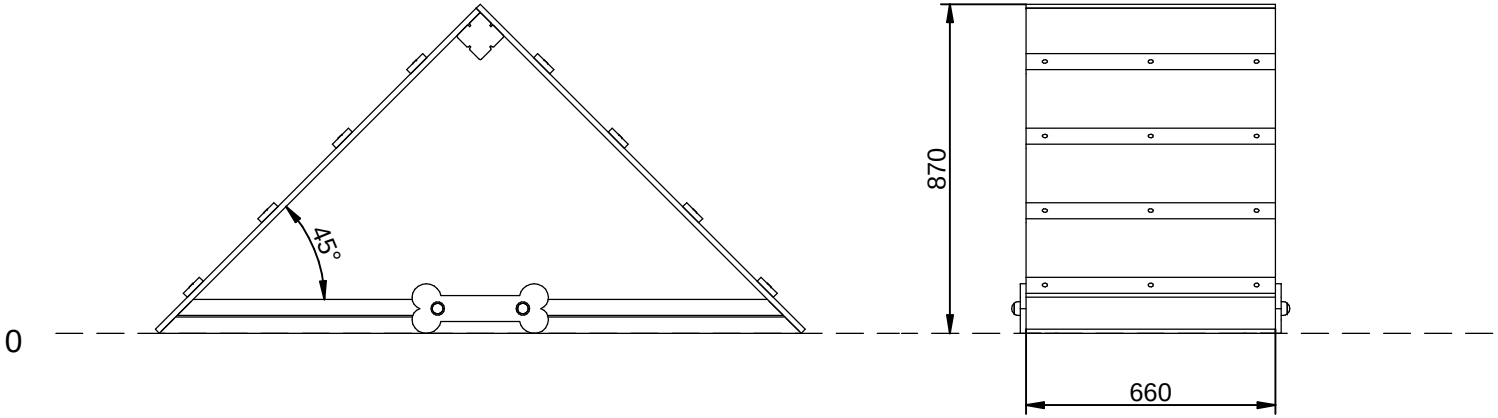

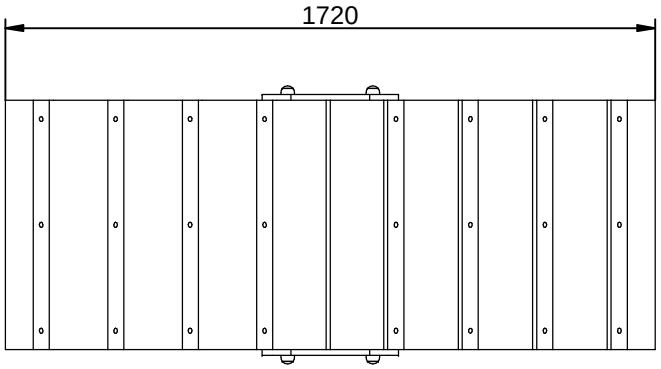

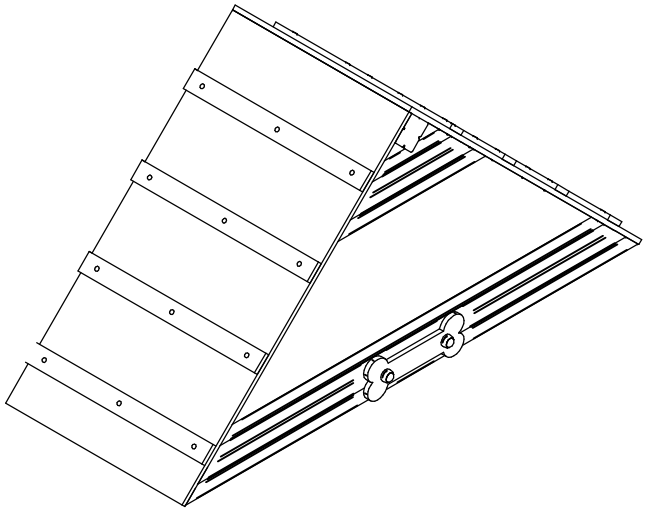

V 01 10/03/2020